14” -20” MECHANICAL LINE STOP MACHINE

102” Travel-14” 150# to 20” 150# and 14” 600# to 20” 600#

PRESSURE/TEMPERATURE LIMITS

Maximum Operating Pressure @ 100°F

102” Travel ----------1480psi

Maximum Operating Temperature

102” Travel ---------- -20 to 180°F @ 1376psi

Control Bar Diameter ---------3.5”

Control Bar Bolt Size ----------⅝”x 5” Shoulder Bolt

Function	Rating/Operating Dimensions
Maximum Operating Pressure	1480 PSI @ 100°F
Maximum Operating Temperature	-20°F to 180°F @ 1376 PSI
Maximum Test Pressure	1480 PSI with 600# Flange
Maximum Bar Travel	102”
Normal Line Stop Range	150# & 600#
Size Range	14” – 20” (22” in some situations)
Attaching Flange	
O-ring	Smooth Face
RTJ	6” 600#
Attaching Flange Bolt Size	
O-ring	⅝”- 11 x 4-½”
RTJ	
Flat Faced RTJ Flange	1”-8 x 3-½”
Raced Face RTJ Flange	1”-8 x 4”
RTJ Gasket Size	R 45
O-Ring Size	#352 (5.270” OD x 4.850” ID 0.210” Cross Section) #350 (5.020” OD x 4.600” ID 0.210” Cross Section)
Control Bar Diameter	3- ½”
Control Bar Bolt Size	⅝” x 5” Shoulder Bolt
Control Bar Bolt Nut Size	½”-13
Bar Lock Wrench Size	½” Hex Key
Weight With Out Housing	1062 LBS

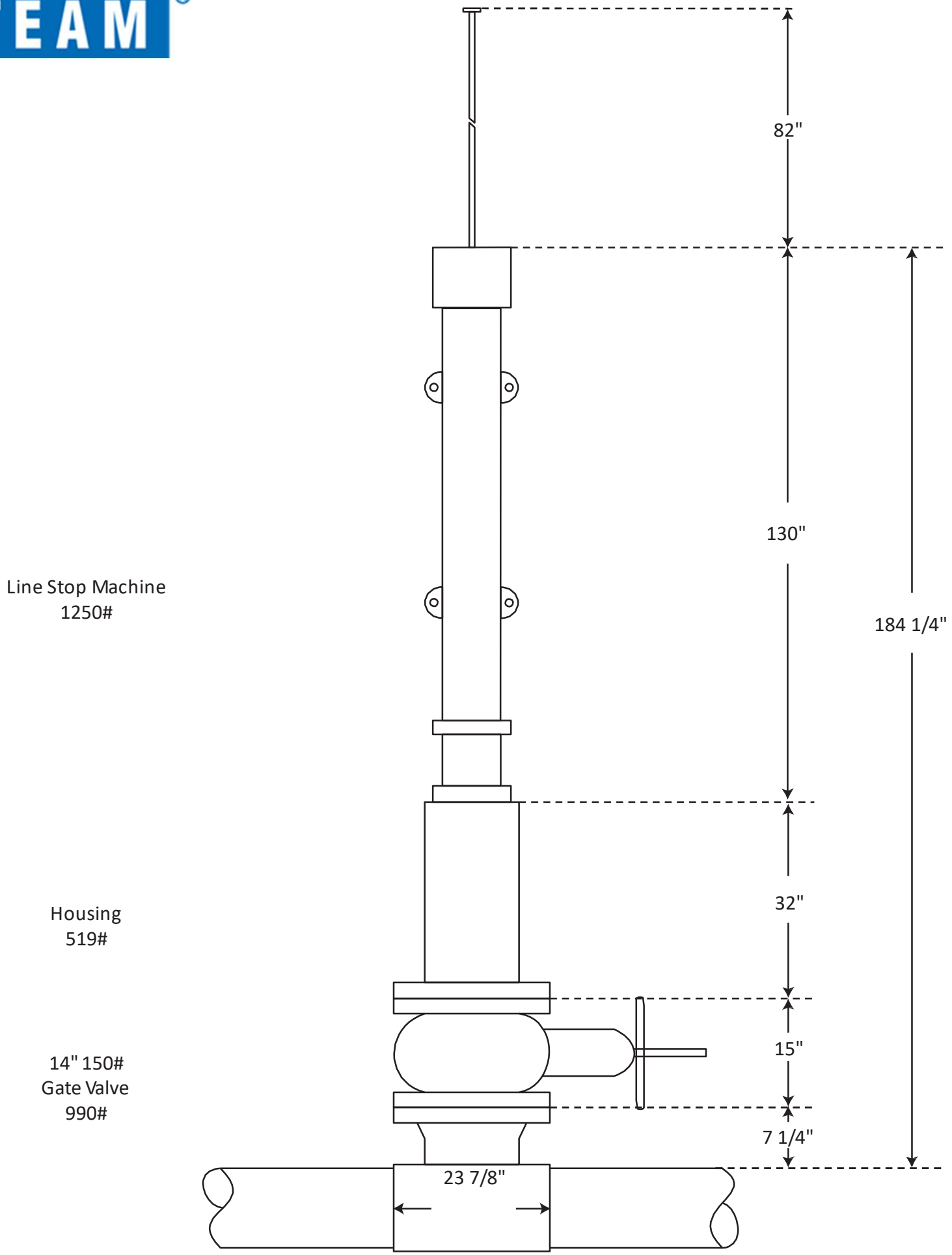

MA–102 Plug Setter 14" 150# Line Stop

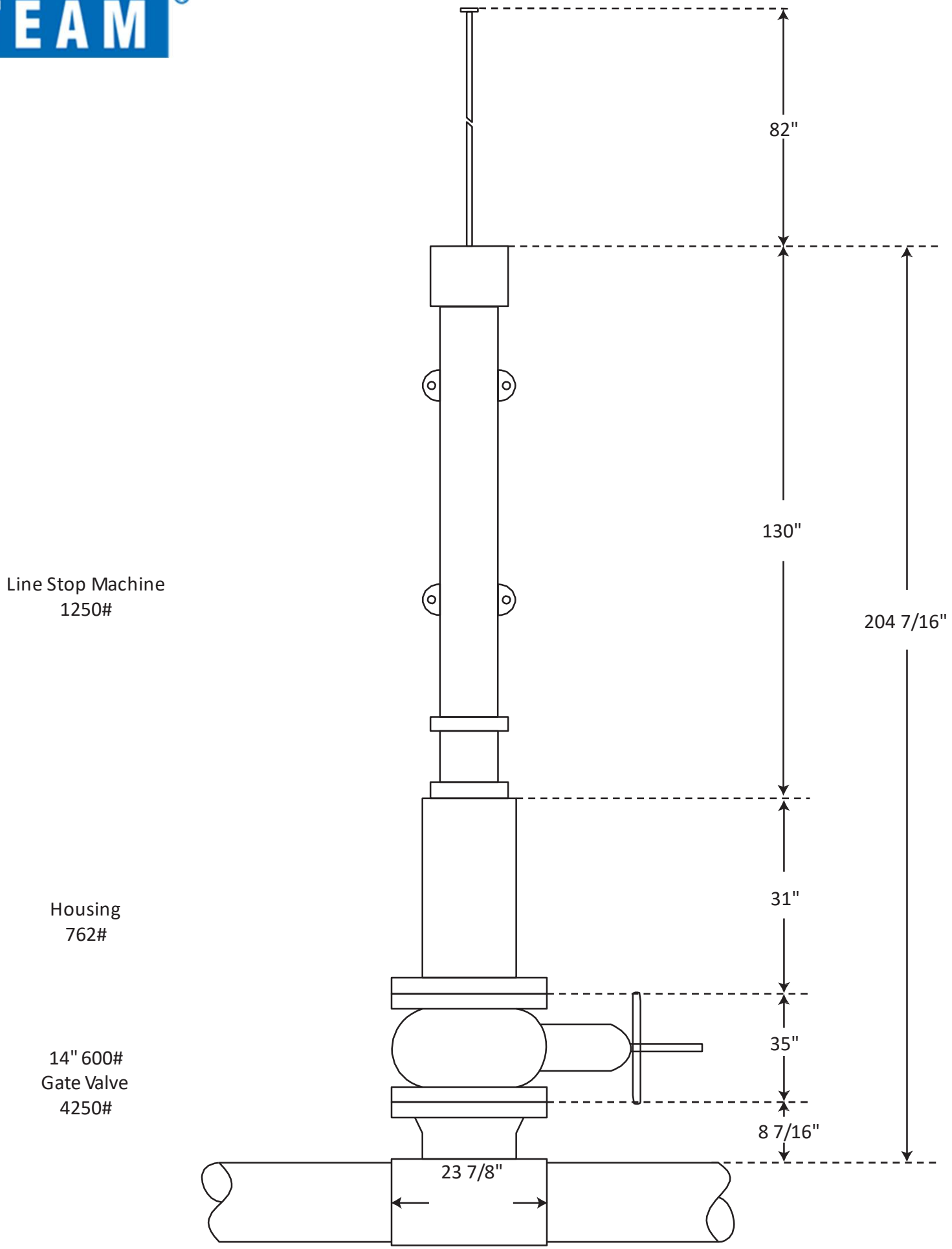

MA–102 Plug Setter 14" 600# Line Stop

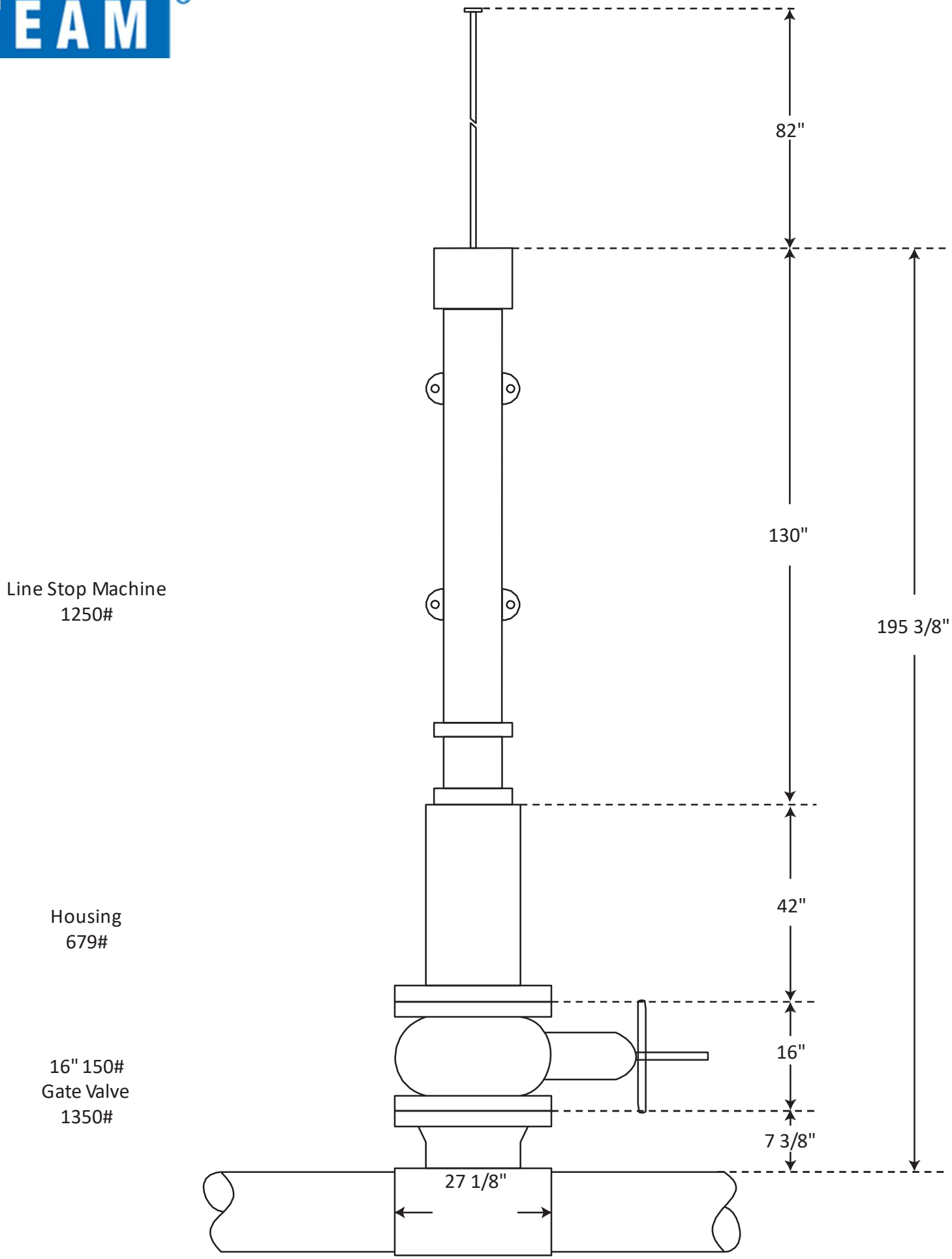

MA–102 Plug Setter 16" 150# Line Stop

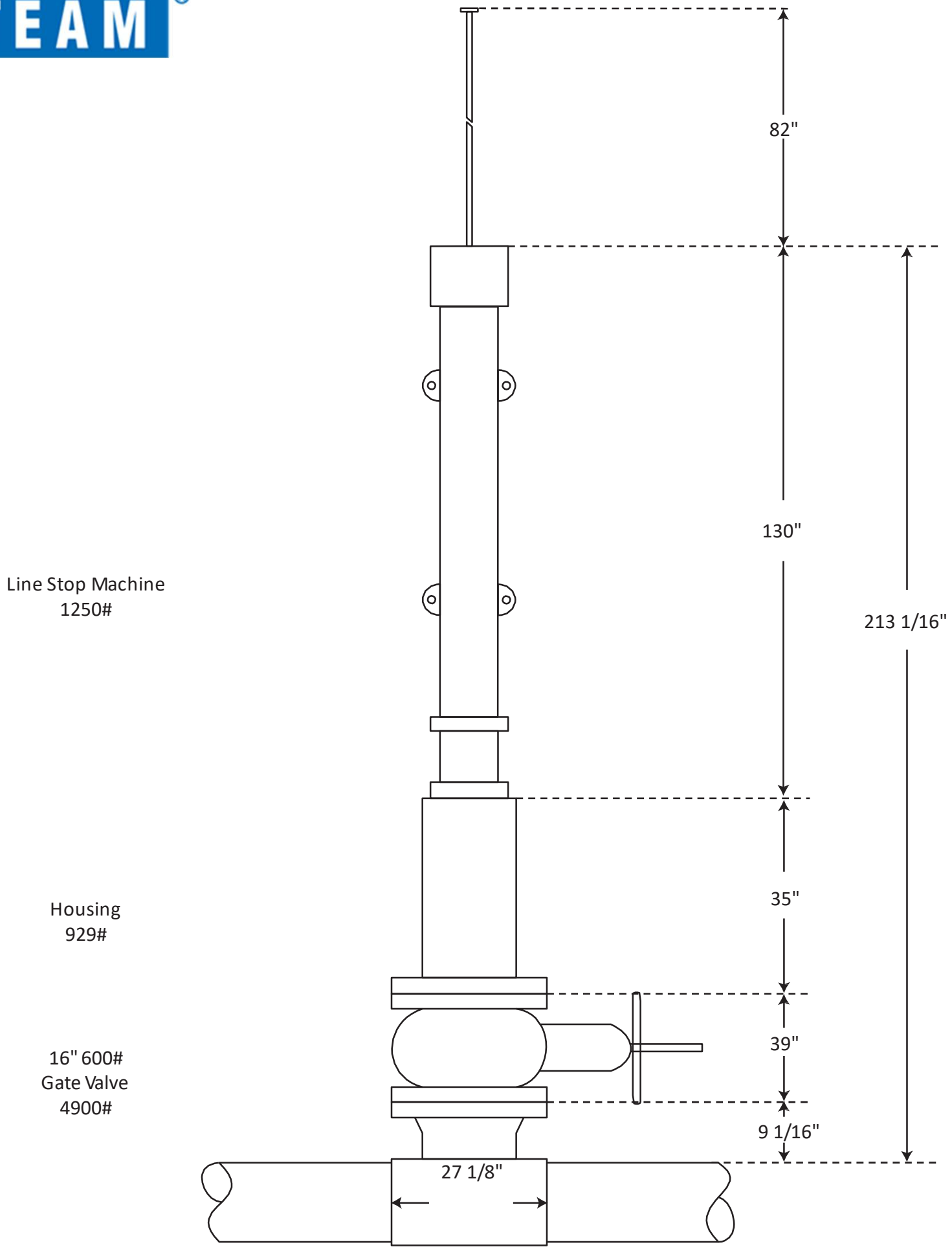

MA–102 Plug Setter 16" 600# Line Stop

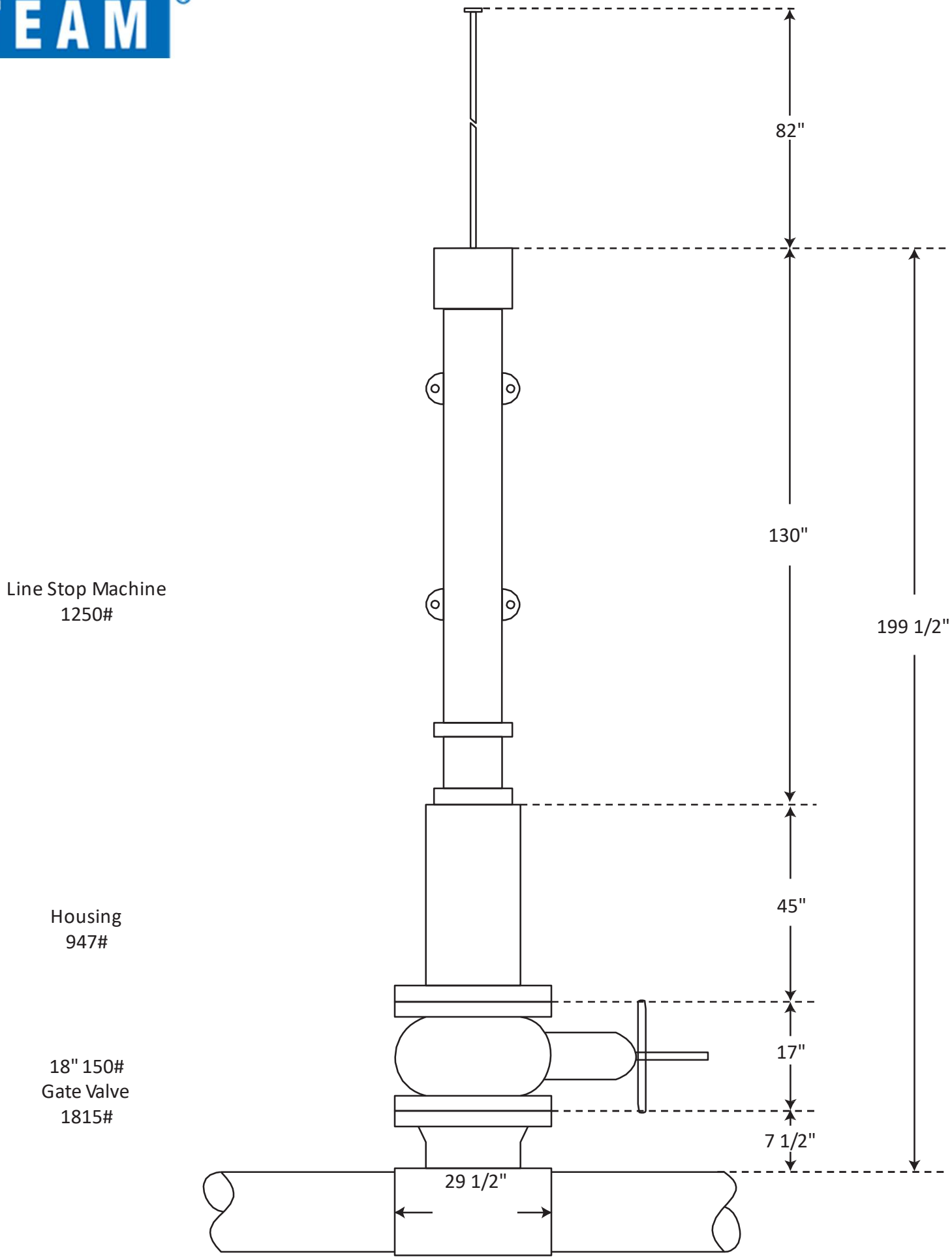

MA-102 Plug Setter 18" 150# Line Stop

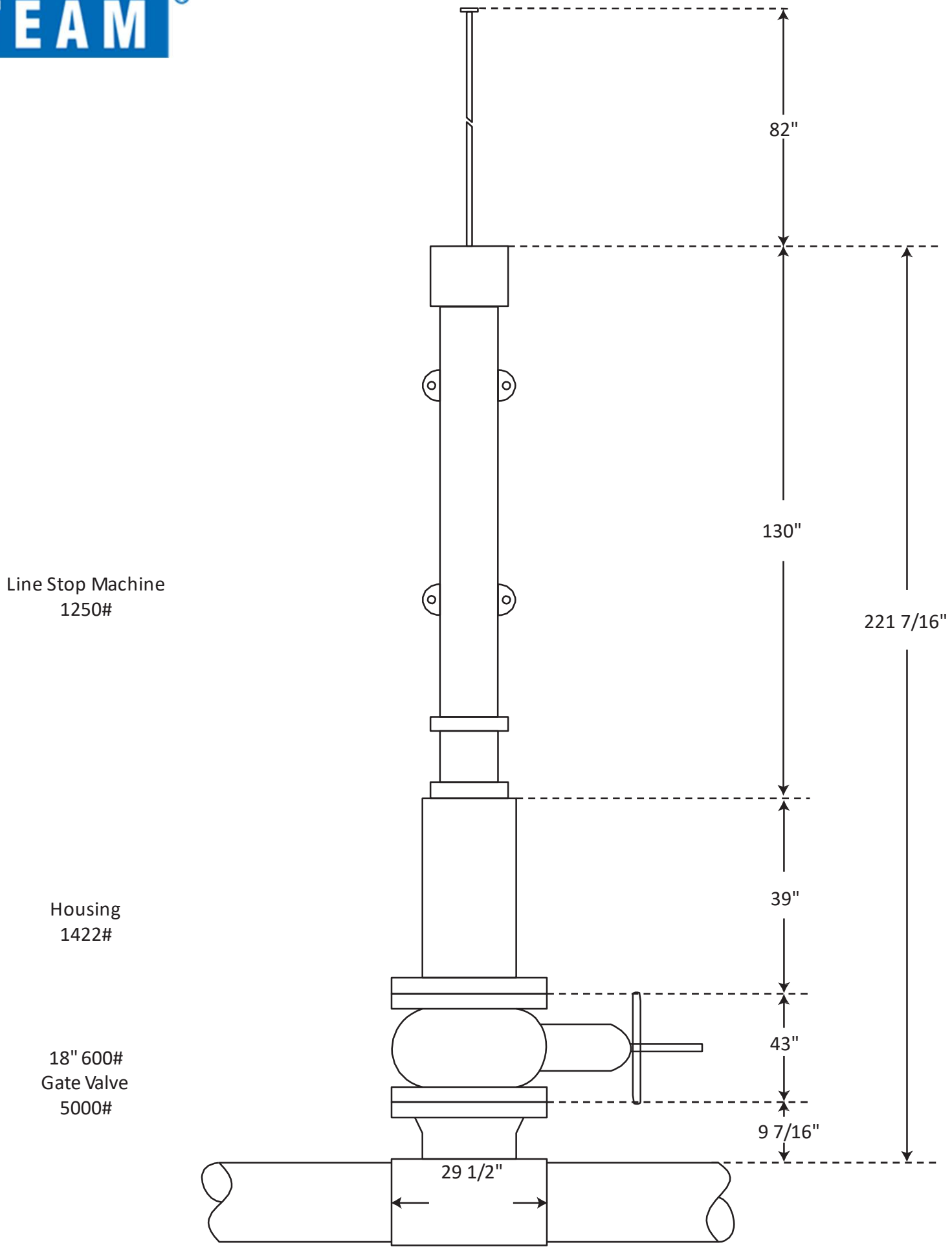

MA-102 Plug Setter 18" 600# Line Stop

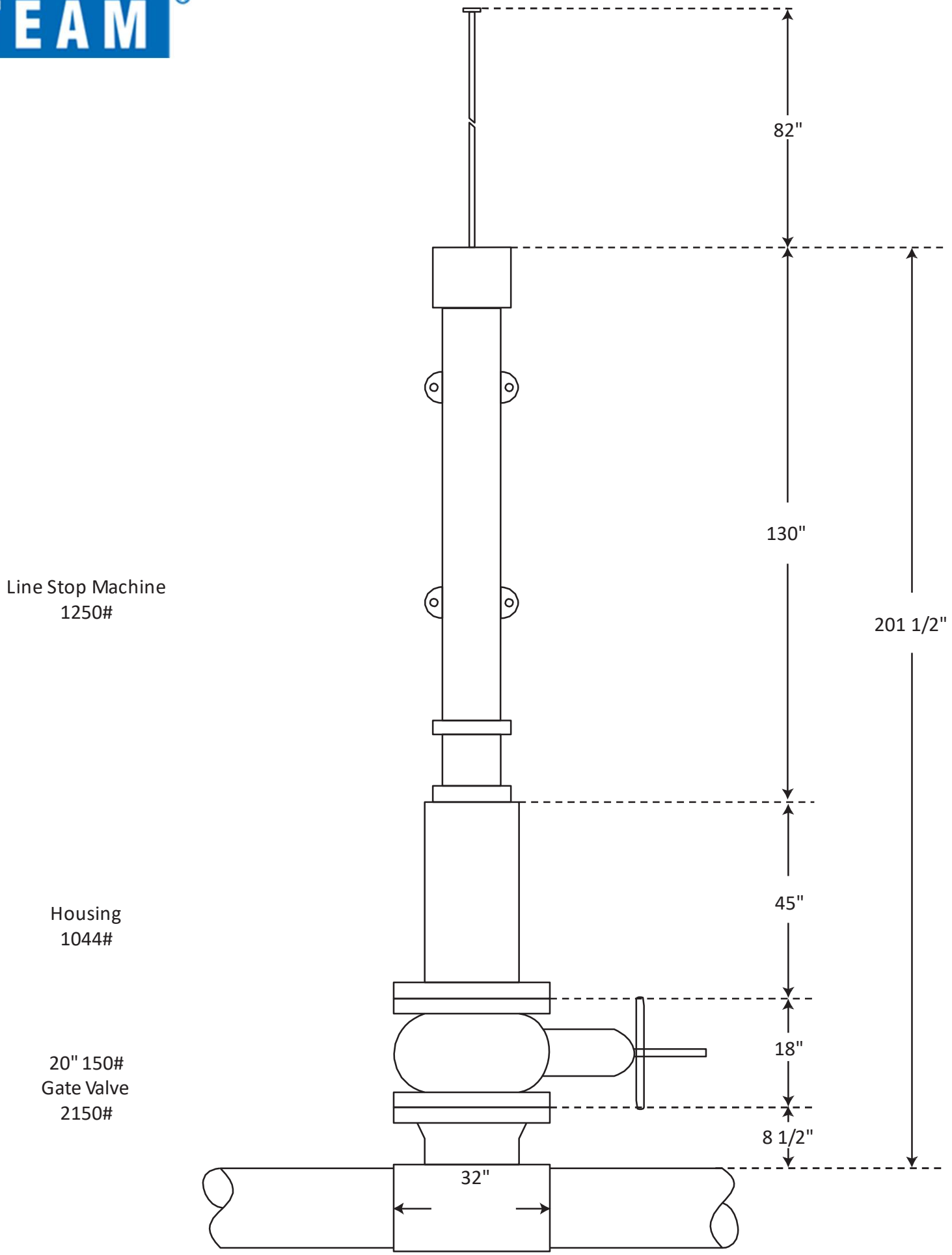

MA-102 Plug Setter 20" 150# Line Stop

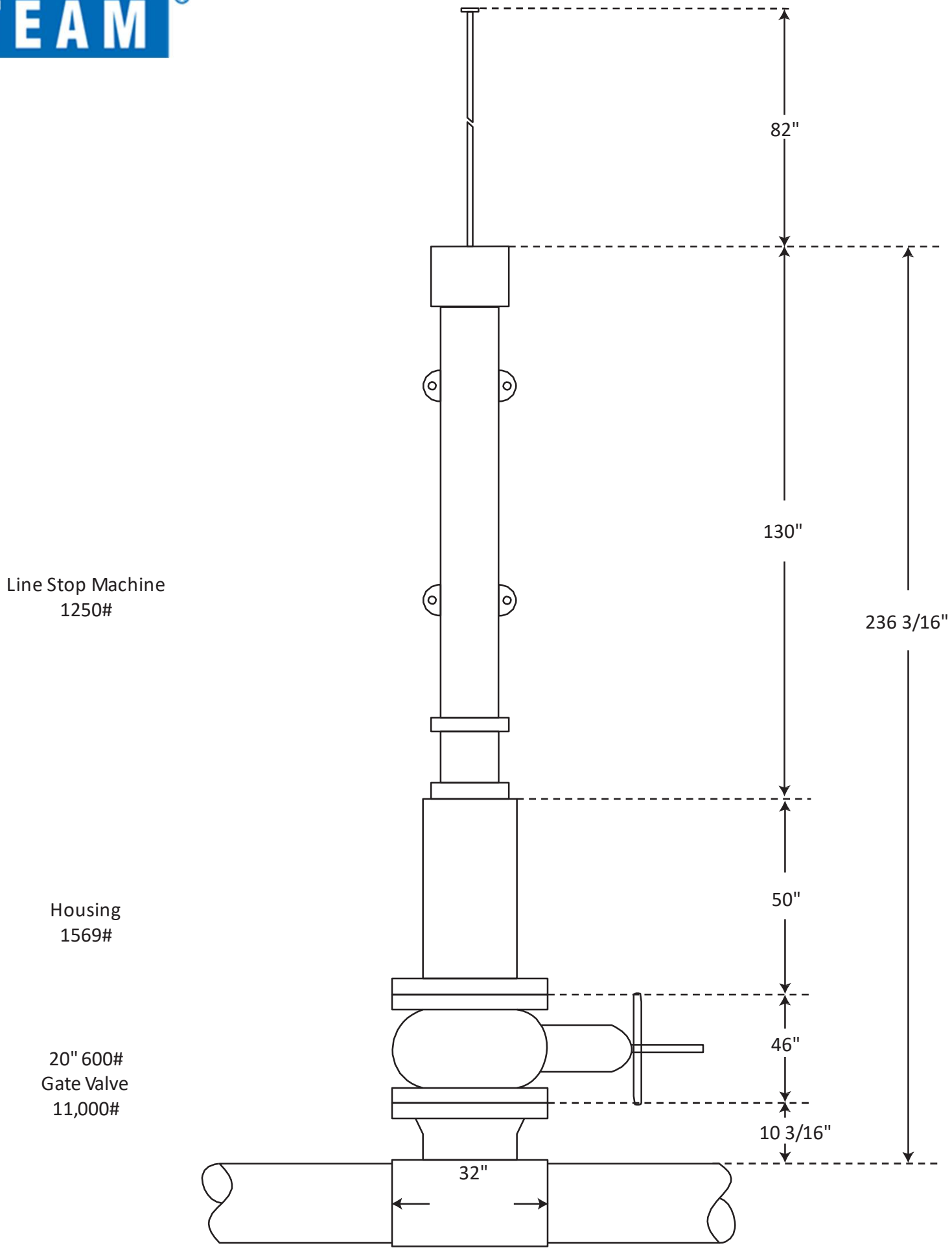

MA–102 Plug Setter 20" 600# Line Stop